Module 6 - SQL Data Manipulation Language (DML)

SQL Language Families

DDL: **D**ata **D**efinition **L**anguage

- Create & alter schemas

DML: **D**ata **M**anipulation **L**anguage

- Manipulate date (insert/update/delete)

DCL: **D**ata **C**ontrol **L**anguage

- Permissions & access

TCL: **T**ransaction **C**ontrol **L**anguage

- Transactions

TABLE 7.1

SQL DATA MANIPULATION COMMANDS

COMMAND, OPTION, OR OPERATOR	DESCRIPTION	COVERED
SELECT	**Selects attributes from rows in one or more tables or views**	**Chapter 7**
FROM	Specifies the tables from which data should be retrieved	Chapter 7
WHERE	Restricts the selection of rows based on a conditional expression	Chapter 7
GROUP BY	Groups the selected rows based on one or more attributes	Chapter 7
HAVING	Restricts the selection of grouped rows based on a condition	Chapter 7
ORDER BY	Orders the selected rows based on one or more attributes	Chapter 7
INSERT	**Inserts row(s) into a table**	**Chapter 8**
UPDATE	**Modifies an attribute's values in one or more table's rows**	**Chapter 8**
DELETE	**Deletes one or more rows from a table**	**Chapter 8**
Comparison operators		**Chapter 7**
=, <, >, <=, >=, <>, !=	Used in conditional expressions	Chapter 7
Logical operators		**Chapter 7**
AND/OR/NOT	Used in conditional expressions	Chapter 7
Special operators	**Used in conditional expressions**	**Chapter 7**
BETWEEN	Checks whether an attribute value is within a range	Chapter 7
IN	Checks whether an attribute value matches any value within a value list	Chapter 7
LIKE	Checks whether an attribute value matches a given string pattern	Chapter 7
IS NULL	Checks whether an attribute value is null	Chapter 7
EXISTS	Checks whether a subquery returns any rows	Chapter 7
DISTINCT	Limits values to unique values	Chapter 7
Aggregate functions	**Used with SELECT to return mathematical summaries on columns**	**Chapter 7**
COUNT	Returns the number of rows with non-null values for a given column	Chapter 7
MIN	Returns the minimum attribute value found in a given column	Chapter 7
MAX	Returns the maximum attribute value found in a given column	Chapter 7
SUM	Returns the sum of all values for a given column	Chapter 7
AVG	Returns the average of all values for a given column	Chapter 7

SQL DML: Insert, Update, Delete, Select

Entering Data

```
INSERT INTO tablename VALUES (value1, value2, … , valuen);
```

Examples:

```
INSERT INTO VENDOR VALUES (21225, 'Bryson, Inc.', 'Smithson', '615', '223-3234', 'TN', 'Y');
INSERT INTO VENDOR VALUES (21226, 'Superloo, Inc.', 'Flushing', '904', '215-8995', 'FL', 'N');
…
INSERT INTO PRODUCT VALUES (
        '11QER/31', 'Power Painter, 15 psi., 3-nozzle', '03-Nov-17', 8, 5, 109.99, 0.00, 25595);

…
```

Rows with NULL Attributes

INSERT INTO *PRODUCT* VALUES

('BRT-345', 'Titanium drill bit', '18-Oct-17', 75, 10, 4.50, 0.06, NULL);

- It is possible to enter **NULL** as an attribute value.
- NULL is not the same as **empty string ''**

Rows with Optional Attributes

```
INSERT INTO PRODUCT( P_CODE, P_DESCRIPT) VALUES
        ('BRT-345', 'Titanium drill bit');
```

- Specify **mandatory attributes**
- You can leave out **optional attributes**

Updating Data

UPDATE *tablename*

SET *columnname* = *expression* [, *columnname* = *expression*]

[WHERE *conditionlist*];

Deleting Data

```
DELETE FROM tablename

[ WHERE conditionlist ];
```

NOTE: If WHERE is not specified → all rows will be deleted

SELECT Basics

The whole point of storing & organizing data is to be able **to produce the information we need**.

Information Need & SQL

- We usually express an information need with a **question:**
  - How many customers do we have?
  - How much revenue did we make last month?
  - Which cities do we sell to the most?
  - Can I get a list of all our vendors sorted by the number of products we source from them?
  - …
- In SQL terms, we call such questions, a **query**. i.e to answer these questions we **write & run a query.**

How do we **translate** our questions **into SQL** queries ?

What you will learn …

At the end of this class you will be able to:

- **Retrieve** specific columns of data from a database table
- **Join** multiple tables in a single SQL query
- **Restrict** data retrievals to rows that match complex criteria

The Most Basic SQL Query

SELECT * FROM *table;*

SQL queries **end with a `;`**

Two **SQL clauses**.

The Database Model

FIGURE 7.1 THE DATABASE MODEL

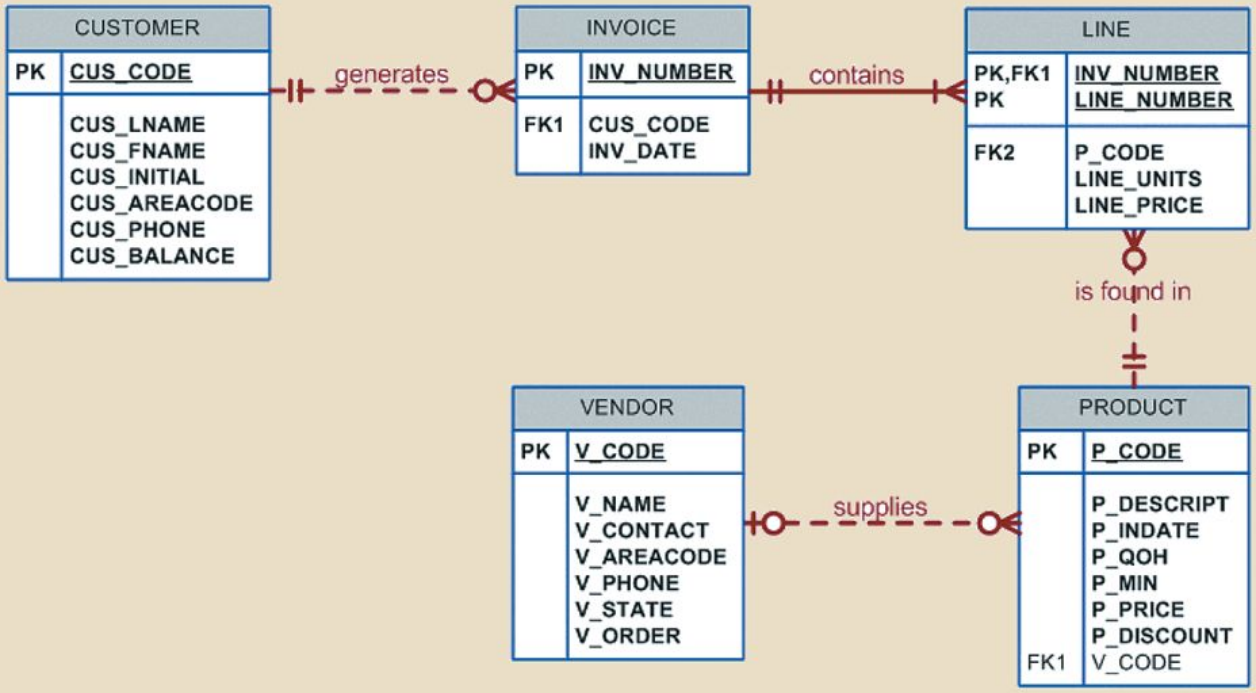

The Most Basic SQL Query

SELECT * FROM *table;*

Returns **all data** -- your **entire table**.

SELECT * FROM *PRODUCT*;

FIGURE 7.2 SELECT AN ENTIRE TABLE

P_CODE	P_DESCRIPT	P_INDATE	P_QOH	P_MIN	P_PRICE	P_DISCOUNT	V_CODE
11QER/31	Power painter, 15 psi., 3-nozzle	03-Nov-17	8	5	109.99	0.00	25595
13-Q2/P2	7.25-in. pwr. saw blade	13-Dec-17	32	15	14.99	0.05	21344
14-Q1/L3	9.00-in. pwr. saw blade	13-Nov-17	18	12	17.49	0.00	21344
1546-QQ2	Hrd. cloth, 1/4-in., 2x50	15-Jan-18	15	8	39.95	0.00	23119
1558-QW1	Hrd. cloth, 1/2-in., 3x50	15-Jan-18	23	5	43.99	0.00	23119
2232/QTY	B&D jigsaw, 12-in. blade	30-Dec-17	8	5	109.92	0.05	24288
2232/QWE	B&D jigsaw, 8-in. blade	24-Dec-17	6	5	99.87	0.05	24288
2238/QPD	B&D cordless drill, 1/2-in.	20-Jan-18	12	5	38.95	0.05	25595
23109-HB	Claw hammer	20-Jan-18	23	10	9.95	0.10	21225
23114-AA	Sledge hammer, 12 lb.	02-Jan-18	8	5	14.40	0.05	
54778-2T	Rat-tail file, 1/8-in. fine	15-Dec-17	43	20	4.99	0.00	21344
89-WRE-Q	Hicut chain saw, 16 in.	07-Feb-18	11	5	256.99	0.05	24288
PVC23DRT	PVC pipe, 3.5-in., 8-ft	20-Feb-18	188	75	5.87	0.00	
SM-18277	1.25-in. metal screw, 25	01-Mar-18	172	75	6.99	0.00	21225
SW-23116	2.5-in. wd. screw, 50	24-Feb-18	237	100	8.45	0.00	21231
WR3/TT3	Steel matting, 4'x8'x1/6", .5" mesh	17-Jan-18	18	5	119.95	0.10	25595

SELECT Clause

But sometimes you don't want an entire table:

Maybe you just want to list products' **descriptions** along with **prices** and the **quantity** remaining in your inventory. You also want to see product **codes** for reference.

SELECT *columnlist*

Specifies the **attributes to be returned**

SELECT *P_CODE, P_DECRIPT, P_PRICE, P_QOH*
FROM *PRODUCT* **;**

Notice that **only requested columns** are returned

The columns are returned **in the same order as they were listed** in the query.

FIGURE 7.3 SELECT WITH A COLUMN LIST

P_CODE	P_DESCRIPT	P_PRICE	P_QOH
11QER/31	Power painter, 15 psi., 3-nozzle	109.99	8
13-Q2/P2	7.25-in. pwr. saw blade	14.99	32
14-Q1/L3	9.00-in. pwr. saw blade	17.49	18
1546-QQ2	Hrd. cloth, 1/4-in., 2x50	39.95	15
1558-QW1	Hrd. cloth, 1/2-in., 3x50	43.99	23
2232/QTY	B&D jigsaw, 12-in. blade	109.92	8
2232/QWE	B&D jigsaw, 8-in. blade	99.87	6
2238/QPD	B&D cordless drill, 1/2-in.	38.95	12
23109-HB	Claw hammer	9.95	23
23114-AA	Sledge hammer, 12 lb.	14.40	8
54778-2T	Rat-tail file, 1/8-in. fine	4.99	43
89-WRE-Q	Hicut chain saw, 16 in.	256.99	11
PVC23DRT	PVC pipe, 3.5-in., 8-ft	5.87	188
SM-18277	1.25-in. metal screw, 25	6.99	172
SW-23116	2.5-in. wd. screw, 50	8.45	237
WR3/TT3	Steel matting, 4'x8'x1/6", .5" mesh	119.95	18

ORDER BY Clause

What if you wanted to **sort** your products **by** their price?

Question: Can I get a listing of all our products and their quantities? Can you please sort the list by price?

** notice that this question is **not 100% precise but good enough**. You as DB designers and SQL programmers need to use your best judgments to clarify questions.**

ORDER BY *columnlist* [ASC|DESC]

Default

SELECT *P_CODE, P_DECRIPT, P_PRICE, P_QOH*
FROM *PRODUCT*
ORDER BY *P_PRICE* **;**

By default sorts from lowest to highest value -- i.e. in **ASC**ending order.

To sort so the highest price is first, choose **DESC** option at the end:

SELECT …
FROM *PRODUCT*
ORDER BY *P_PRICE* **DESC;**

FIGURE 7.18 PRODUCTS SORTED BY PRICE IN ASCENDING ORDER

P_CODE	P_DESCRIPT	P_QOH	P_PRICE
54778-2T	Rat-tail file, 1/8-in. fine	43	4.99
PVC23DRT	PVC pipe, 3.5-in., 8-ft	188	5.87
SM-18277	1.25-in. metal screw, 25	172	6.99
SW-23116	2.5-in. wd. screw, 50	237	8.45
23109-HB	Claw hammer	23	9.95
23114-AA	Sledge hammer, 12 lb.	8	14.40
13-Q2/P2	7.25-in. pwr. saw blade	32	14.99
14-Q1/L3	9.00-in. pwr. saw blade	18	17.49
2238/QPD	B&D cordless drill, 1/2-in.	12	38.95
1546-QQ2	Hrd. cloth, 1/4-in., 2x50	15	39.95
1558-QW1	Hrd. cloth, 1/2-in., 3x50	23	43.99
2232/QWE	B&D jigsaw, 8-in. blade	6	99.87
2232/QTY	B&D jigsaw, 12-in. blade	8	109.92
11QER/31	Power painter, 15 psi., 3-nozzle	8	109.99
WR3/TT3	Steel matting, 4'x8'x1/6", .5" mesh	18	119.95
89-WRE-Q	Hicut chain saw, 16 in.	11	256.99

So far ...

- We have learned some very **basic** --and very **useful**-- SQL
- Each query is composed of two or more clause.
- We have seen the following **clauses** at work:
  - **SELECT**
  - **FROM**
  - **ORDER BY**
- We have briefly looked at specifying ***columnlists*** in SELECT clause.
- Each query ends with a **;**

WHERE Clause

WHERE *conditionlist*

One or more **expressions** separated by **logical operators**

Each expression checks for the value of a specific attribute using **Comparison Operators** (= , <>, !=, <=, ...) or **Special Operators** (BETWEEN, IN, LIKE, IS NULL, NOT)

Usually you want to search by multiple conditions. So you use AND, OR and NOT **to combine conditions.**

Example

```
SELECT P_DECRIPT, P_QOH, P_PRICE, V_CODE
FROM PRODUCT
WHERE V_CODE = 21344;
```

Equal To

FIGURE 7.21 SELECTED PRODUCT ATTRIBUTES FOR VENDOR CODE 21344

P_DESCRIPT	P_QOH	P_PRICE	V_CODE
7.25-in. pwr. saw blade	32	14.99	21344
9.00-in. pwr. saw blade	18	17.49	21344
Rat-tail file, 1/8-in. fine	43	4.99	21344

Example

```
SELECT P_DECRIPT, P_QOH, P_PRICE, V_CODE
FROM PRODUCT
WHERE V_CODE != 21344;
```

Not Equal To

FIGURE 7.23 PRODUCT ATTRIBUTES FOR VENDOR CODES OTHER THAN 21344

P_DESCRIPT	P_QOH	P_PRICE	V_CODE
Power painter, 15 psi., 3-nozzle	8	109.99	25595
Hrd. cloth, 1/4-in., 2x50	15	39.95	23119
Hrd. cloth, 1/2-in., 3x50	23	43.99	23119
B&D jigsaw, 12-in. blade	8	109.92	24288
B&D jigsaw, 8-in. blade	6	99.87	24288
B&D cordless drill, 1/2-in.	12	38.95	25595
Claw hammer	23	9.95	21225
Hicut chain saw, 16 in.	11	256.99	24288
1.25-in. metal screw, 25	172	6.99	21225
2.5-in. wd. screw, 50	237	8.45	21231
Steel matting, 4'x8'x1/6", .5" mesh	18	119.95	25595

Example

```
SELECT P_DECRIPT, P_QOH, P_MIN, P_PRICE
FROM PRODUCT
WHERE P_PRICE <= 10;
```

Less than or equal To

FIGURE 7.24 SELECT PRODUCT TABLE ATTRIBUTES WITH A P_PRICE RESTRICTION

P_DESCRIPT	P_QOH	P_MIN	P_PRICE
Claw hammer	23	10	9.95
Rat-tail file, 1/8-in. fine	43	20	4.99
PVC pipe, 3.5-in., 8-ft	188	75	5.87
1.25-in. metal screw, 25	172	75	6.99
2.5-in. wd. screw, 50	237	100	8.45

Example

```
SELECT P_CODE, P_DECRIPT, P_QOH, P_MIN, P_PRICE
FROM PRODUCT
WHERE P_CODE < '1558-QW1';
```

You can also compare **character attributes** with Comparison Operators. (Because characters are identified with **ASCII codes which are numerical**)

FIGURE 7.25 THE ASCII CODE EFFECT

P_CODE	P_DESCRIPT	P_QOH	P_MIN	P_PRICE
11QER/31	Power painter, 15 psi., 3-nozzle	8	5	109.99
13-Q2/P2	7.25-in. pwr. saw blade	32	15	14.99
14-Q1/L3	9.00-in. pwr. saw blade	18	12	17.49
1546-QQ2	Hrd. cloth, 1/4-in., 2x50	15	8	39.95

Example

SELECT *P_DECRIPT, P_QOH, P_MIN, P_PRICE, P_INDATE*

FROM *PRODUCT*

WHERE *P_INDATE* **>=** *'20-Jan-2018' (MS ACCESS Syntax)/*

P_INDATE **>=** *'2018-01-20' (MySQL Syntax)* **;**

You can also compare **Date attributes** with Comparison Operators. (Because Dates are implemented as the **number of days that have passed** since a defined point of time in history)

FIGURE 7.26 SELECTED PRODUCT TABLE ATTRIBUTES: DATE RESTRICTION

P_DESCRIPT	P_QOH	P_MIN	P_PRICE	P_INDATE
B&D cordless drill, 1/2-in.	12	5	38.95	20-Jan-18
Claw hammer	23	10	9.95	20-Jan-18
Hicut chain saw, 16 in.	11	5	256.99	07-Feb-18
PVC pipe, 3.5-in., 8-ft	188	75	5.87	20-Feb-18
1.25-in. metal screw, 25	172	75	6.99	01-Mar-18
2.5-in. wd. screw, 50	237	100	8.45	24-Feb-18

Example

```
SELECT P_DECRIPT, P_QOH, P_MIN, P_PRICE, V_CODE
FROM PRODUCT
WHERE V_CODE = 21344 OR V_CODE = 24288 ;
```

FIGURE 7.27 THE LOGICAL OR

P_DESCRIPT	P_QOH	P_PRICE	V_CODE
7.25-in. pwr. saw blade	32	14.99	21344
9.00-in. pwr. saw blade	18	17.49	21344
B&D jigsaw, 12-in. blade	8	109.92	24288
B&D jigsaw, 8-in. blade	6	99.87	24288
Rat-tail file, 1/8-in. fine	43	4.99	21344
Hicut chain saw, 16 in.	11	256.99	24288

Example

```
SELECT P_DECRIPT, P_QOH, P_MIN, P_PRICE
FROM PRODUCT
WHERE P_PRICE > 100 AND P_QOH < 20 ;
```

FIGURE 7.28 THE LOGICAL AND

P_DESCRIPT	P_QOH	P_PRICE	V_CODE
Power painter, 15 psi., 3-nozzle	8	109.99	25595
B&D jigsaw, 12-in. blade	8	109.92	24288
Hicut chain saw, 16 in.	11	256.99	24288
Steel matting, 4'x8'x1/6", .5" mesh	18	119.95	25595

FROM Clause

Sometimes the data we need is stored in multiple tables:

Question: Can I get a listing of all our **products** with prices and **vendor info**?

FROM … ?

To answer such questions, we need to **bring pieces of data together from different tables.**

We do this through **joining tables**.

JOIN ON Syntax

SELECT *column-list*

FROM *table1* JOIN *table2* ON *join-condition*;

Joining two tables **results in a table**.

Common Attribute Names

- JOIN ON syntax, results in a table that includes all columns from the two tables.
- You need to use **table qualifiers** to refer to attributes with common names in your queries:

```
SELECT P_DECRIPT, P_PRICE, V_NAME, V_CONTACT, V_AREACODE, V_PHONE
FROM PRODUCT JOIN VENDOR ON PRODUCT.V_CODE = VENDOR.V_CODE ;
```

Table Qualifiers

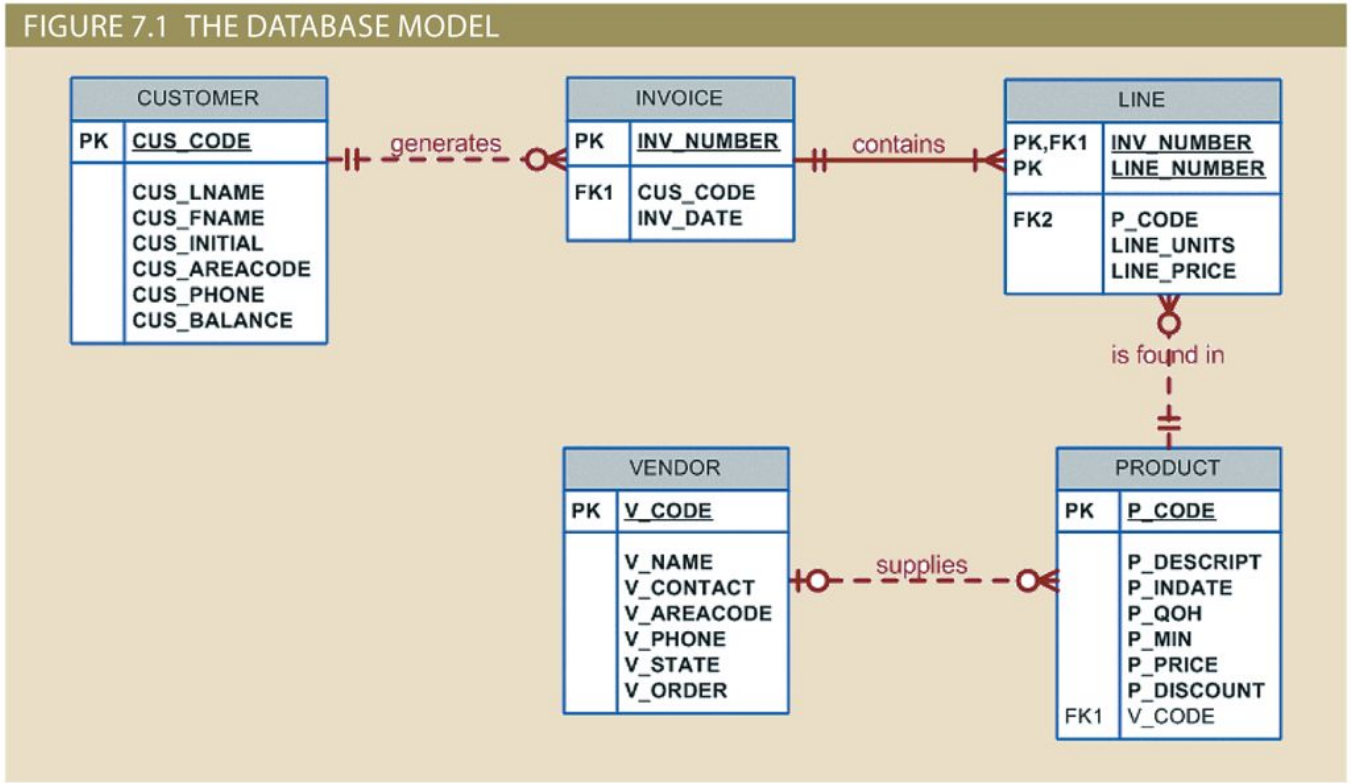

Example

Question: Can I get a listing of all our **products** with prices and **vendor info**?

To join VENDOR and PRODUCT tables, we need to **find a link**.

What do you think would be an appropriate link between PRODUCT and VENDOR?

```
SELECT P_DECRIPT, P_PRICE, V_NAME, V_CONTACT, V_AREACODE, V_PHONE
FROM PRODUCT JOIN VENDOR ON PRODUCT.V_CODE = VENDOR.V_CODE ;
```

FIGURE 7.8 THE RESULTS OF A JOIN

P_DESCRIPT	P_PRICE	V_NAME	V_CONTACT	V_AREACODE	V_PHONE
Claw hammer	9.95	Bryson, Inc.	Smithson	615	223-3234
1.25-in. metal screw, 25	6.99	Bryson, Inc.	Smithson	615	223-3234
2.5-in. wd. screw, 50	8.45	D&E Supply	Singh	615	228-3245
7.25-in. pwr. saw blade	14.99	Gomez Bros.	Ortega	615	889-2546
9.00-in. pwr. saw blade	17.49	Gomez Bros.	Ortega	615	889-2546
Rat-tail file, 1/8-in. fine	4.99	Gomez Bros.	Ortega	615	889-2546
Hrd. cloth, 1/4-in., 2x50	39.95	Randsets Ltd.	Anderson	901	678-3998
Hrd. cloth, 1/2-in., 3x50	43.99	Randsets Ltd.	Anderson	901	678-3998
B&D jigsaw, 12-in. blade	109.92	ORDVA, Inc.	Hakford	615	898-1234
B&D jigsaw, 8-in. blade	99.87	ORDVA, Inc.	Hakford	615	898-1234
Hicut chain saw, 16 in.	256.99	ORDVA, Inc.	Hakford	615	898-1234
Power painter, 15 psi., 3-nozzle	109.99	Rubicon Systems	Orton	904	456-0092
B&D cordless drill, 1/2-in.	38.95	Rubicon Systems	Orton	904	456-0092
Steel matting, 4'x8'x1/6", .5" mesh	119.95	Rubicon Systems	Orton	904	456-0092

Outer Joins

- JOIN ON performs what is known as an **inner join**

  → Only returns matched records

- But there are also **outer joins**

  → (Matched records + unmatched records from one or both of the tables) are returned

  → **3 types:** LEFT OUTER JOIN, RIGHT OUTER JOIN, FULL OUTER JOIN

LEFT JOIN

SELECT *P_CODE, VENDOR.V_CODE, V_NAME*
FROM *VENDOR* **LEFT JOIN** *PRODUCT* **ON** *VENDOR.V_CODE = PRODUCT.V_CODE*;

Returns **all vendors** and the products they supply.

- Vendors who supply more than one product are listed more than once.
- **Vendors that don't supply any products are also listed** → with a NULL product record
- i.e **all records from the left table** (VENDOR) are returned even if unmatched.

FIGURE 7.13 LEFT JOIN RESULTS

P_CODE	V_CODE	V_NAME
23109-HB	21225	Bryson, Inc.
SM-18277	21225	Bryson, Inc.
	21226	SuperLoo, Inc.
SW-23116	21231	D&E Supply
13-Q2/P2	21344	Gomez Bros.
14-Q1/L3	21344	Gomez Bros.
54778-2T	21344	Gomez Bros.
	22567	Dome Supply
1546-QQ2	23119	Randsets Ltd.
1558-QW1	23119	Randsets Ltd.
	24004	Brackman Bros.
2232/QTY	24288	ORDVA, Inc.
2232/QWE	24288	ORDVA, Inc.
89-WRE-Q	24288	ORDVA, Inc.
	25443	B&K, Inc.
	25501	Damal Supplies
11QER/31	25595	Rubicon Systems
2238/QPD	25595	Rubicon Systems
WR3/TT3	25595	Rubicon Systems

RIGHT JOIN

SELECT *P_CODE, VENDOR.V_CODE, V_NAME*
FROM *VENDOR* **RIGHT JOIN** *PRODUCT* **ON** *VENDOR.V_CODE = PRODUCT.V_CODE*;

Returns **all products** and the vendors.

- All products are listed once.
- **Products that are not supplied by a vendor** are listed as well. (with NULL vendor info)
- i.e **all records from the right table** (PRODUCT) are returned even if unmatched.

FIGURE 7.14 RIGHT JOIN RESULTS

P_CODE	V_CODE	V_NAME
23114-AA		
PVC23DRT		
23109-HB	21225	Bryson, Inc.
SM-18277	21225	Bryson, Inc.
SW-23116	21231	D&E Supply
13-Q2/P2	21344	Gomez Bros.
14-Q1/L3	21344	Gomez Bros.
54778-2T	21344	Gomez Bros.
1546-QQ2	23119	Randsets Ltd.
1558-QW1	23119	Randsets Ltd.
2232/QTY	24288	ORDVA, Inc.
2232/QWE	24288	ORDVA, Inc.
89-WRE-Q	24288	ORDVA, Inc.
11QER/31	25595	Rubicon Systems
2238/QPD	25595	Rubicon Systems
WR3/TT3	25595	Rubicon Systems

FULL JOIN

SELECT *P_CODE, VENDOR.V_CODE, V_NAME*
FROM *VENDOR* **FULL JOIN** *PRODUCT* **ON** *VENDOR.V_CODE = PRODUCT.V_CODE*;

Returns **all products & all vendors** either matched or unmatched

FIGURE 7.15 FULL OUTER JOIN RESULTS

P_CODE	V_CODE	V_NAME
	21226	SuperLoo, Inc.
	22567	Dome Supply
	24004	Brackman Bros.
	25443	B&K, Inc.
	25501	Damal Supplies
11QER/31	25595	Rubicon Systems
13-Q2/P2	21344	Gomez Bros.
14-Q1/L3	21344	Gomez Bros.
1546-QQ2	23119	Randsets Ltd.
1558-QW1	23119	Randsets Ltd.
2232/QTY	24288	ORDVA, Inc.
2232/QWE	24288	ORDVA, Inc.
2238/QPD	25595	Rubicon Systems
23109-HB	21225	Bryson, Inc.
23114-AA		
54778-2T	21344	Gomez Bros.
89-WRE-Q	24288	ORDVA, Inc.
PVC23DRT		
SM-18277	21225	Bryson, Inc.
SW-23116	21231	D&E Supply
WR3/TT3	25595	Rubicon Systems

WHERE Clause

Suppose you want to know all VENDORs who are not currently supplying any products.

→ One way to answer this question is to use a JOIN to return all VENDORs matched with their products. If the product info for a vendor is null, we know they don't supply any products

```
SELECT P_CODE, VENDOR.V_CODE, V_NAME
FROM VENDOR LEFT JOIN PRODUCT ON VENDOR.V_CODE = PRODUCT.V_CODE
WHERE P_CODE IS NULL;
```

Some Notes About JOINs

- Joins are the **real power** behind the relational database
- allow information to be **combined intelligently** from two or more tables

DATABASE DESIGN

DECOMPOSE

- Designer decomposes an integrated set of data into separate entities.

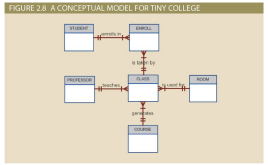

DATA RETRIEVAL

JOIN

- Programmer re-integrates pieces of the data.

A Few Notes

Different DMBSs expect different **Date formats**

Character & Date values must be **quoted** with apostrophes

As with creating tables, the **order** of operations **matters**

Most RDBMSs allow you to **import** data from CSV files

Summary

- SELECT -- specifies attributes to be returned
- FROM -- specifies the table(s) from which data will be retrieved
- WHERE -- filters the rows of data based on provided condition
- ORDER By -- sorts the final results (ASC, DESC)
- JOIN -- combines data from two or more tables